3-Compartment Tray (PPST-9300)

MATERIAL: *Copolymer*

- Economical
- Break, chip, and crack resistant
- Can withstand temperatures from -32 to 212 degrees Fahrenheit
- Reusable
- Recyclable
- Dishwasher safe
- Microwave safe

COLORS:

BUFF CHOCOLATE ORANGE TEAL

CASE PACK: *24 trays per case; 14.05 lbs*

COMPATIBLE LID: *PPJZL-9*

(See lid spec sheet)

DESIGN:

- Stackable with lids
- Textured bottom to resist scratches and gouges
- Beaded rim for longer durability and safety
- 2-rib design for strength and structural integrity
- 15 degree slopes for more generous food presentation and faster wash/dry

DIMENSIONS:

Length: 10.50” Width: 8.50” Height: 2.13”

Height with lid: 2.25"

Double park trays in standard door slot (no need to wait for inmate to remove first one)

COMPARTMENT SIZES:

Large slot:
Volume: 34.7oz
Medium slot:
Volume: 17.4oz
Small slot:
Volume: 11.8oz

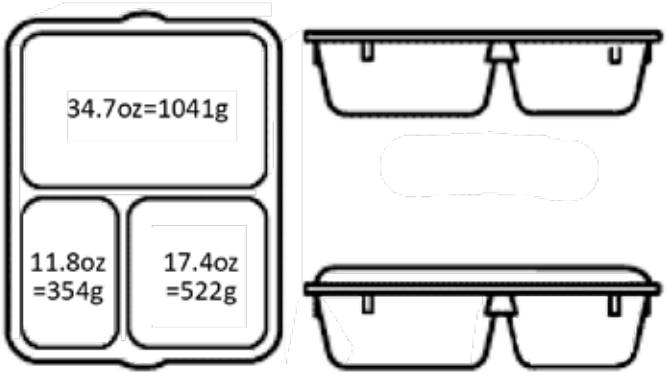

P.O. Box 149 | West Lafayette, Ohio 43845
800.848.8160 office | 877.632.6344 fax | solutions@joneszylon.com